Analogue Slave Clock

For In- and Outdoor, DCF / GPS

Function

Autonomous clock. Synchronization via DCF or GPS

Description

- Single sided clock for wall mounting
- Double sided clock including bracket for either wall mounting, standing on roof or hanging from ceiling
- Dial face with hour and minute marks or numerals and minute marks in black on white background. Hour and minute hand black
- Flat protective glass 4 mm
- Aluminium case, RAL 850-M

Options

- Case, dials, hands color at buyer's option (extra charge)
- Ball protection bars, Polycarbonate-cover
- Background lighting, requires 230 VAC. Also available as special version with lighting in the frame
- Mounting on mast base
- 800 mm diameter on request
- Also available as GPS versions

Technical data

Power consumption	20 mA at 24 V
Environmental temperature	-20 °C to 60 °C
Rel. humidity	85 %
Protection	IP65

Versions

Single-sided clock with battery

Diameter	Type	Article name	A = face with numerals H = face with marks
Ø 400 mm	DCF Clock, alu	D9141620-00	A, alu, battery
Ø 400 mm	DCF Clock, alu	D9143620-00	H, alu, battery
Ø 600 mm	DCF Clock, alu	D9161620-00	A, alu, battery
Ø 600 mm	DCF Clock, alu	D9163620-00	H, alu, battery
Ø 900 mm	DCF Clock, alu	D9191620-00	A, alu, battery
Ø 900 mm	DCF Clock, alu	D9193620-00	H, alu, battery

Double-sided clock with battery

Diameter	Type	Article name	A = face with numerals H = face with marks
Ø 400 mm	DCF Clock, alu	D9441620-00	A, alu, battery
Ø 400 mm	DCF Clock, alu	D9443620-00	H, alu, battery
Ø 600 mm	DCF Clock, alu	D9461620-00	A, alu, battery
Ø 600 mm	DCF Clock, alu	D9463620-00	H, alu, battery
Ø 900 mm	DCF Clock, alu	D9491620-00	A, alu, battery
Ø 900 mm	DCF Clock, alu	D9493620-00	H, alu, battery

Single-sided clock 230 VAC

Diameter	Type	Article name	A = face with numerals H = face with marks
Ø 400 mm	DCF Clock, alu	D9141600-00	A, alu, 230 VAC
Ø 400 mm	DCF Clock, alu	D9143600-00	H, alu, 230 VAC
Ø 600 mm	DCF Clock, alu	D9161600-00	A, alu, 230 VAC
Ø 600 mm	DCF Clock, alu	D9163600-00	H, alu, 230 VAC
Ø 600 mm	DCF Clock, alu, LED illum	D9162600-50	A, alu, 230 VAC
Ø 600 mm	DCF Clock, alu, LED illum	D9164600-50	H, alu, 230 VAC
Ø 900 mm	DCF Clock, alu	D9191600-00	A, alu, 230 VAC
Ø 900 mm	DCF Clock, alu	D9193600-00	H, alu, 230 VAC
Ø 900 mm	DCF Clock, alu, LED illum	D9192600-50	A, alu, 230 VAC
Ø 900 mm	DCF Clock, alu, LED illum	D9194600-50	H, alu, 230 VAC

Double-sided clock 230 VAC

Diameter	Type	Article name	A = face with numerals H = face with marks
Ø 400 mm	DCF Clock, alu	D9441600-00	A, alu, 230 VAC
Ø 400 mm	DCF Clock, alu	D9443600-00	H, alu, 230 VAC
Ø 400 mm	DCF Clock, alu, LED illum	D9442600-50	A, alu, 230 VAC
Ø 400 mm	DCF Clock, alu, LED illum	D9444600-50	H, alu, 230 VAC
Ø 600 mm	DCF Clock, alu	D9461600-00	A, alu, 230 VAC
Ø 600 mm	DCF Clock, alu	D9463600-00	H, alu, 230 VAC
Ø 600 mm	DCF Clock, alu, LED illum	D9462600-50	A, alu, 230 VAC
Ø 600 mm	DCF Clock, alu, LED illum	D9464600-50	H, alu, 230 VAC
Ø 900 mm	DCF Clock, alu	D9491600-00	A, alu, 230 VAC
Ø 900 mm	DCF Clock, alu	D9493600-00	H, alu, 230 VAC
Ø 900 mm	DCF Clock, alu, LED illum	D9492600-50	A, alu, 230 VAC
Ø 900 mm	DCF Clock, alu, LED illum	D9494600-50	H, alu, 230 VAC

Dimensions
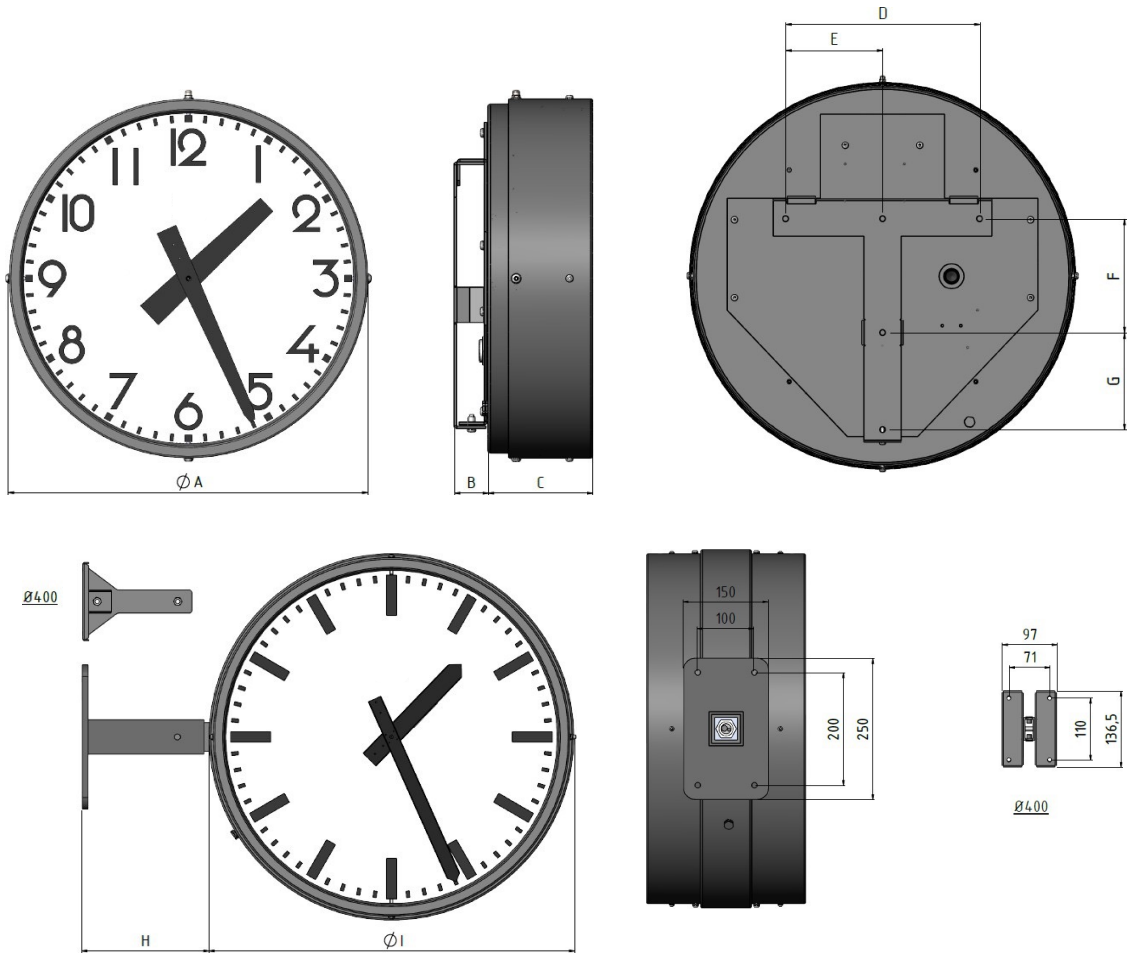
Size [mm]	Visible distance [m]	Seconds	LED illum	Weight single-sided / double-sided [kg]	Dimensions single-sided clocks [mm]							Dimensions double-sided clocks [mm]	
					A	B	C	D	E	F	G	H	I
Ø 400	35	No	No	6 / 9,5	407	38	97	210	105	43	207	195	407
Ø 400	35	No	Yes	7 / 11	407	38	118	210	105	43	207	195	407
Ø 400	35	Yes	No	6,5 / 10	407	38	97	210	105	43	207	195	407
Ø 400	35	Yes	Yes	7,5 / 11,5	407	38	118	210	105	43	207	195	407
Ø 600	65	No	No	8 / 12	621	47	105	312	156	183	156	221	635
Ø 600	65	No	Yes	9 / 13,5	621	47	130	312	156	183	156	221	635
Ø 600	65	Yes	No	8,5 / 13,5	621	47	105	312	156	183	156	221	635
Ø 600	65	Yes	Yes	9,5 / 15	621	47	130	312	156	183	156	221	635
Ø 900	100	No	No	13 / 22	921	47	130	450	225	272	232	X	X
Ø 900	100	No	Yes	14,5 / 24	921	47	130	450	225	272	232	X	X
Ø 900	100	Yes	No	14 / 23	921	47	130	450	225	272	232	X	X
Ø 900	100	Yes	Yes	15,5 / 25	921	47	130	450	225	272	232	X	X